SUBMITTAL DATA SHEET

Horizontal Vent Kits

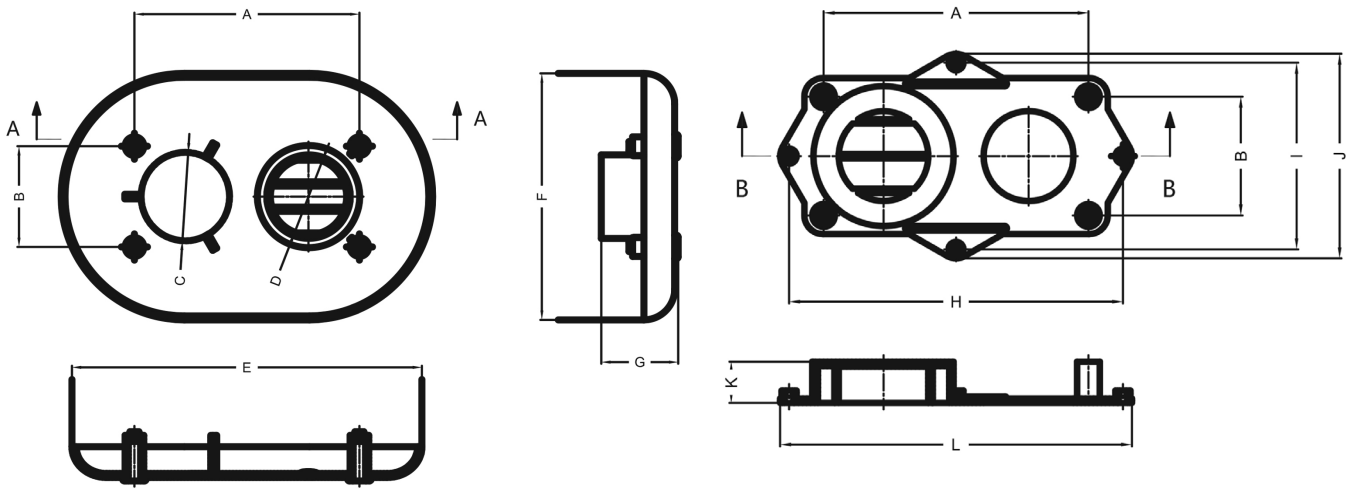

PART NUMBER	A	B	C	D	E	F	G	H	I	J	K	L
22155	7.20"	3.22"	NOM.2"	NOM.2"	11.20"	7.86"	2.46"	9.06"	5.06"	5.55"	1.12"	9.55"
22156	7.20"	3.22"	NOM.3"	NOM.3"	11.20"	7.86"	2.46"	9.06"	5.06"	5.55"	1.12"	9.55"

Part No 22155-22156

Material: PVC (Polyvinyl Chloride)

Size: 2" - 3"

Function: This vent kit is only to be used for venting category IV heaters. Do not use this kit to vent Category I, II, or III heaters. Do not apply to non-condensing heaters. Do not use for roof top venting.

- Use for water heater horizontal venting.
- Polypropylene material.
- Non-Corrosive, Non-Conductive.
- Hide exhausting and intake pipes. Avoid exhausting and intake air mixing.